BODY PLAN

42 Passenger

WHEELBASE 193"

PB10500, 22 FT. 11 IN., CAP 42, SEAT SIZE 39/39, SEAT SPACING VARIES

Total Bus Length incl /Bumpers 28 FT. 2 IN.

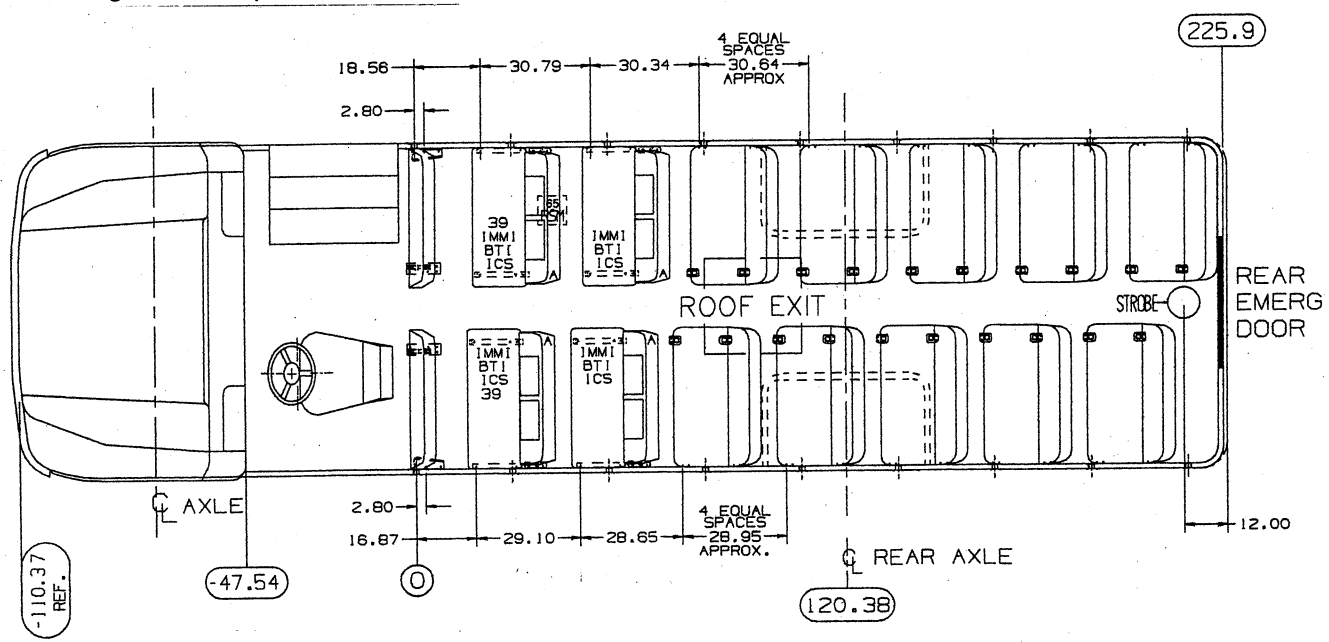

PURCHASED SEATS IN THIS UNIT ARE:
BTI CHILD RESTRAINT

THIS UNIT CONFORMS TO APPLICABLE FMVSS

THIS DOCUMENT IS IN ACCORDANCE WITH ASME Y14.5M-1994 AS AMENDED BY THE INTERNATIONAL TRUCK DIVISION DIMENSIONING AND TOLERANCING ADDENDUM-2000.

50000/49000

REVISE ONLY ON LEGACY SYSTEM

INTERNATIONAL TRUCK AND ENGINE CORPORATION

INTERNATIONAL® CONFIDENTIAL PROPRIETARY

REFERENCE 000

LINEAR MEASURE: mm ☐ in ☒

APPROX. MASS (WEIGHT) ROUGH PART FINISH PART

UNLESS SPECIFIED BIN TOLERANCES ARE

	mm	in
ONE PLACE (.X)	±1.5	±.06
TWO PLACE (.XX)	±0.8	±.03
THREE PLACE (.XXX)	±0.25	±.010
ANGLES	±1°	

THIRD ANGLE PROJECTION

INTERNAL CONTROL

NAME: BODY PLAN PB10500

CONTROL: E 50

NAME TRANSLATION

VERSION: E

DRAWN: U00U185

DATE: 03NOV11

MATERIAL

APPROVED

DATE

APPROVED

DATE

RELEASE NO.

FINE NOUN CODE

PART TYPE CODE

SCALE: NONE

SIZE: 4

PART NO.: WHITE-81

SHEET: 01

FRAME

42 Passenger With Lift & Flat Floor

BODY PLAN

FLAT FLOOR

WHEELBASE 193"

PB10500, 22 FT. 11 IN., CAP 26, SEAT SIZE 39/39, SEAT SPACING VARIES, LIFT-REAR, 2-WC

Total Bus Length incl /Bumpers 28 FT. 2 IN.

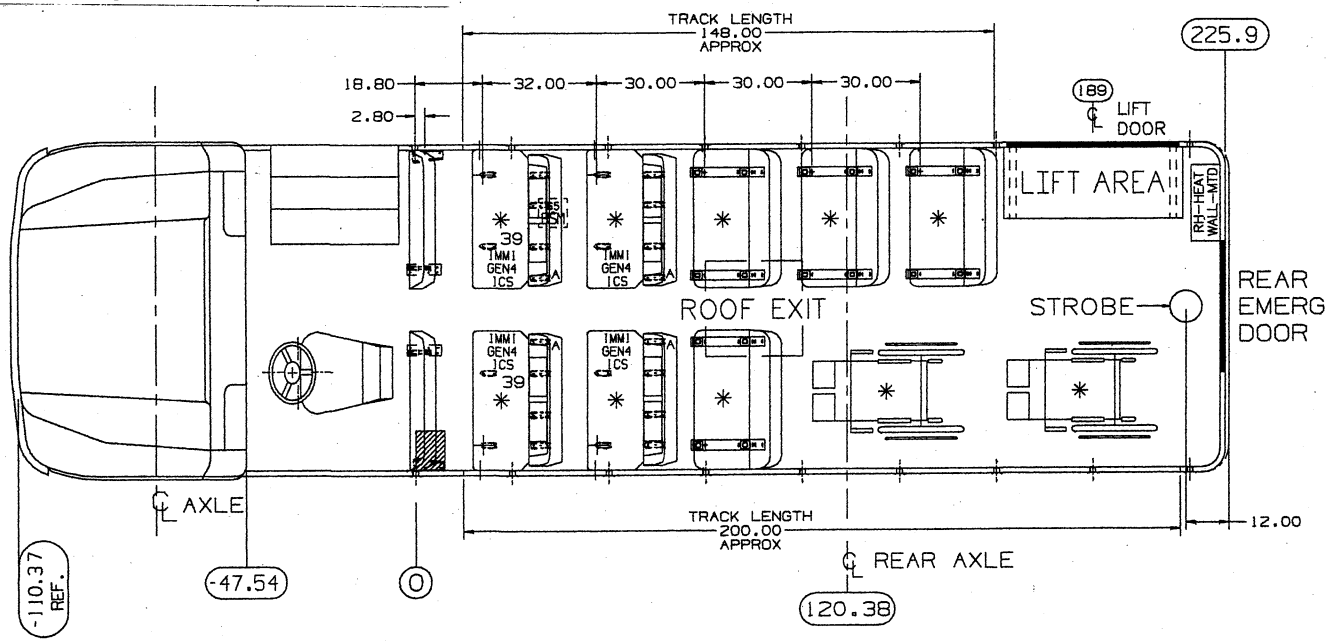

PURCHASED SEATS IN THIS UNIT ARE:
GEN4 CHILD RESTRAINT

✳ 348": TOTAL TRACK LENGTH (APPROXIMATELY)

* NOTE:
IT IS THE SELLING DEALER'S RESPONSIBILITY TO ENSURE THAT ANY WHEELCHAIR TIE - DOWN SYSTEM SPECIFIED AND DEPICTED ON THIS DRAWING MEETS ALL DESTINATION STATE SPECIFICATIONS AND TO ALSO ENSURE THAT THE WHEELCHAIRS CAN BE PLACED AND REMOVED WITH RESPECT TO: SEATS, K/O's, SIDE EMERG DOORS, HEATERS, LIFTS, WHEELHOUSES, ETC..
POSSESSION OF THIS PRINT DOES NOT IN ANY WAY OBLIGATE IC CORP. TO BUILD THE UNIT SHOWN.
WC TRACK SHOWN IS FOR REFERENCE ONLY.

THIS UNIT CONFORMS TO APPLICABLE FMVSS

THIS DOCUMENT IS IN ACCORDANCE WITH ASME Y14.5M-1994 AS AMENDED BY THE INTERNATIONAL TRUCK DIVISION DIMENSIONING AND TOLERANCING ADDENDUM 2000.

50000/49000

INTERNATIONAL TRUCK AND ENGINE CORPORATION

INTERNATIONAL® CONFIDENTIAL PROPRIETARY

REVISE ONLY ON USPAC SYSTEM

REFERENCE	000
LINEAR MEASURE: mm ☐ in ☒	APPROX. MASS (WEIGHT) ROUGH PART / FINISH PART
UNLESS SPECIFIED SEE TOLERANCES ARE mm in: ONE PLACE (.X) ±1.5 ±.06; TWO PLACE (.XX) ±0.8 ±.03; THREE PLACE (.XXX) ±0.25 ±.010; ANGLES ±1°	THIRD ANGLE PROJECTION; INTERNAL CONTROL
NAME: BODY PLAN PB10500	CONTROL E 50
NAME (TRANSLATION)	VERSION E
DRAWN U00U185	MATERIAL
DATE 07NOV11	APPD/REV
CHECKED	DATE
DATE	
APPROVED	PJNE MDUN CODE; PART TYPE CODE; SCALE NONE; SIZE 4
DATE	PART NO. WHITE-88
RELEASE NO.	SHEET 01
	FRAME

VERTICAL HINGED K/O REQUIRED

54 Passenger

BODY PLAN

WHEELBASE 236"

PB10500, 27 FT. 5 IN., CAP 54, SEAT SIZE 39/39, SEAT SPACING VARIES

Total Bus Length incl Bumpers 32 FT. 7 IN.

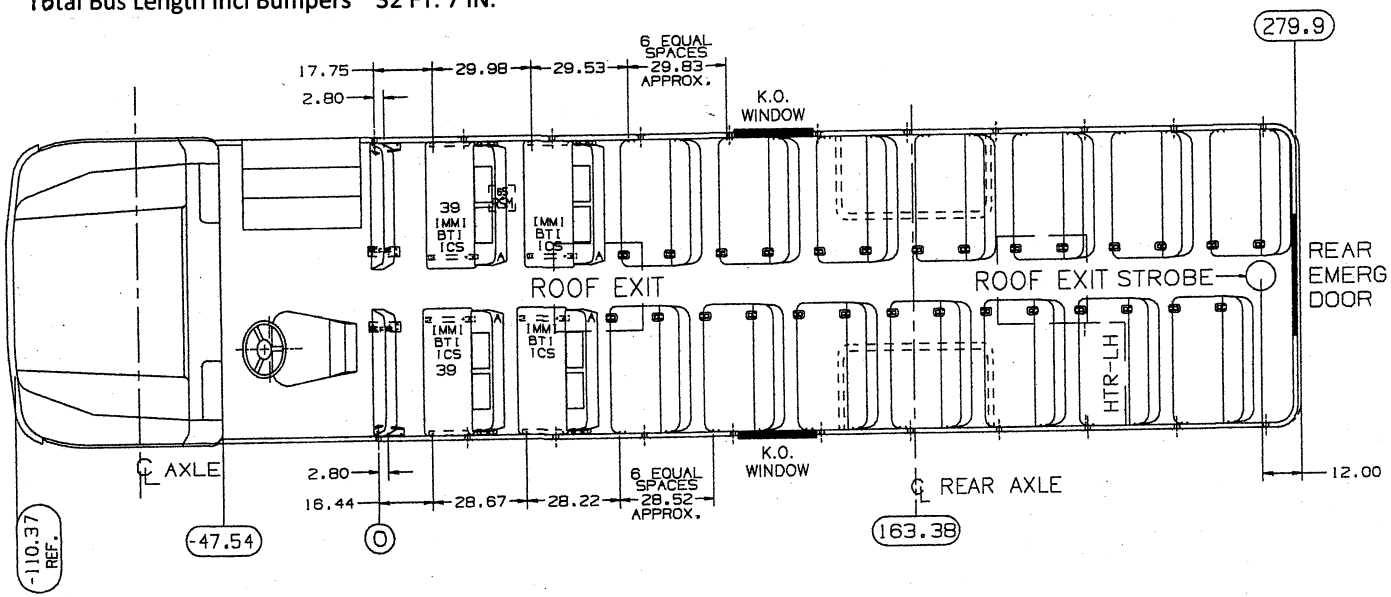

PURCHASED SEATS IN THIS UNIT ARE:
BTI CHILD RESTRAINT

THIS UNIT CONFORMS TO APPLICABLE FMVSS

THIS DOCUMENT IS IN ACCORDANCE WITH ASME Y14.5M-1994 AS AMENDED BY THE INTERNATIONAL TRUCK DIVISION DIMENSIONING AND TOLERANCING ADDENDUM-2000.

50000/49000

REVISE ONLY ON LOGIC SYSTEM

INTERNATIONAL TRUCK AND ENGINE CORPORATION

INTERNATIONAL® CONFIDENTIAL PROPRIETARY

REFERENCE 000

LINEAR MEASURE: mm ☐ in ☒

APPROX. MASS (WEIGHT) ROUGH PART FINISH PART

UNLESS SPECIFIED DIM TOLERANCES ARE

		mm	in
ONE PLACE	(.X)	±1.5	±.06
TWO PLACE	(.XX)	±0.8	±.03
THREE PLACE	(.XXX)	±0.25	±.010
ANGLES		±1°	

THIRD ANGLE PROJECTION

INTERNAL CONTROL

NAME: BODY PLAN PB10500

CONTROL: E 50

NAME TRANSLATION

VERSION: E

DRAWN: U00U185

DATE: 03NOV11

CHECKED

DATE

MATERIAL

APPROVED

DATE

FINE NOUN CODE

PART TYPE CODE

SCALE: NONE

SIZE: 4

PART NO.: WHITE-82

SHEET: 01

RELEASE NO.

LEFT SIDE FUEL FILL OPTION CANNOT BE USED WITH THIS BODY PLAN.

VERTICAL HINGED K/O REQUIRED

BODY PLAN

54 Passenger With Lift

WHEELBASE 236"

PB10500, 28 FT. 11 IN., CAP 41, SEAT SIZE 39/39, SEAT SPACING VARIES, LIFT-REAR, 2-WC

Total Bus Length incl /Bumpers 34 FT. 2 IN.

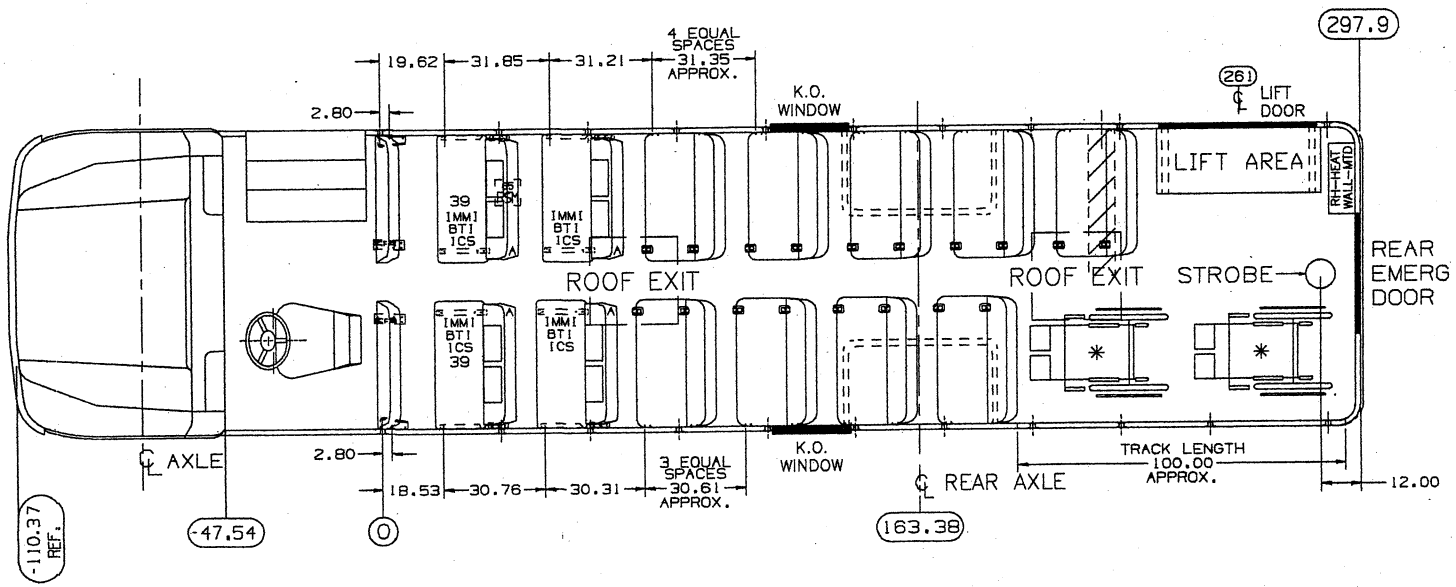

PURCHASED SEATS IN THIS UNIT ARE:
BTI CHILD RESTRAINT

✳ 100": TOTAL TRACK LENGTH (APPROXIMATELY)

* NOTE:
IT IS THE SELLING DEALER'S RESPONSIBILITY TO ENSURE THAT ANY WHEELCHAIR TIE - DOWN SYSTEM SPECIFIED AND DEPICTED ON THIS DRAWING MEETS ALL DESTINATION STATE SPECIFICATIONS AND TO ALSO ENSURE THAT THE WHEELCHAIRS CAN BE PLACED AND REMOVED WITH RESPECT TO: SEATS, K/O's, SIDE EMERG DOORS, HEATERS, LIFTS, WHEELHOUSES, ETC..
POSSESSION OF THIS PRINT DOES NOT IN ANY WAY OBLIGATE IC CORP. TO BUILD THE UNIT SHOWN.
WC TRACK SHOWN IS FOR REFERENCE ONLY.

THIS UNIT CONFORMS TO APPLICABLE FMVSS

THIS DOCUMENT IS IN ACCORDANCE WITH ASME Y14.5M-1994 AS AMENDED BY THE INTERNATIONAL TRUCK DIVISION DIMENSIONING AND TOLERANCING ADDENDUM-2000.

50000/49000

REVISE ONLY ON CADAF SYSTEM

INTERNATIONAL TRUCK AND ENGINE CORPORATION

INTERNATIONAL® CONFIDENTIAL PROPRIETARY

REFERENCE	000
LINEAR MEASURE: mm ☐ in ☒	APPROX. MASS (WEIGHT): ROUGH PART / FINISH PART
UNLESS SPECIFIED DIM TOLERANCES ARE	mm / in
ONE PLACE (.X)	±1.5 / ±.06
TWO PLACE (.XX)	±0.8 / ±.03
THREE PLACE (.XXX)	±0.25 / ±.010
ANGLES	±1°
THIRD ANGLE PROJECTION	INTERNAL CONTROL
NAME	BODY PLAN PB10500
CONTROL	E 50
MARK TRANSLATION	
VERSION	E
DRAWN	U00U185
DATE	03NOV11
CHECKED	
MATERIAL	
APPROVED	
FINE HOUR CODE	
PART TYPE CODE	
SCALE	NONE
SIZE	4
PART NO.	WHITE-84
SHEET	01
RELEASE NO.	

VERTICAL HINGED K/O REQUIRED

FLAT FLOOR

BODY PLAN

WHEELBASE 218"

54 Passenger With Lift & Flat Floor

PB10500, 25 FT. 11 IN., PLUS 9 FRT., CAP 35, SEAT SIZE 39/39, SEAT SPACING VARIES, LIFT-REAR, 2-WC

Total Bus Length incl /Bumpers 31 FT. 2 IN.

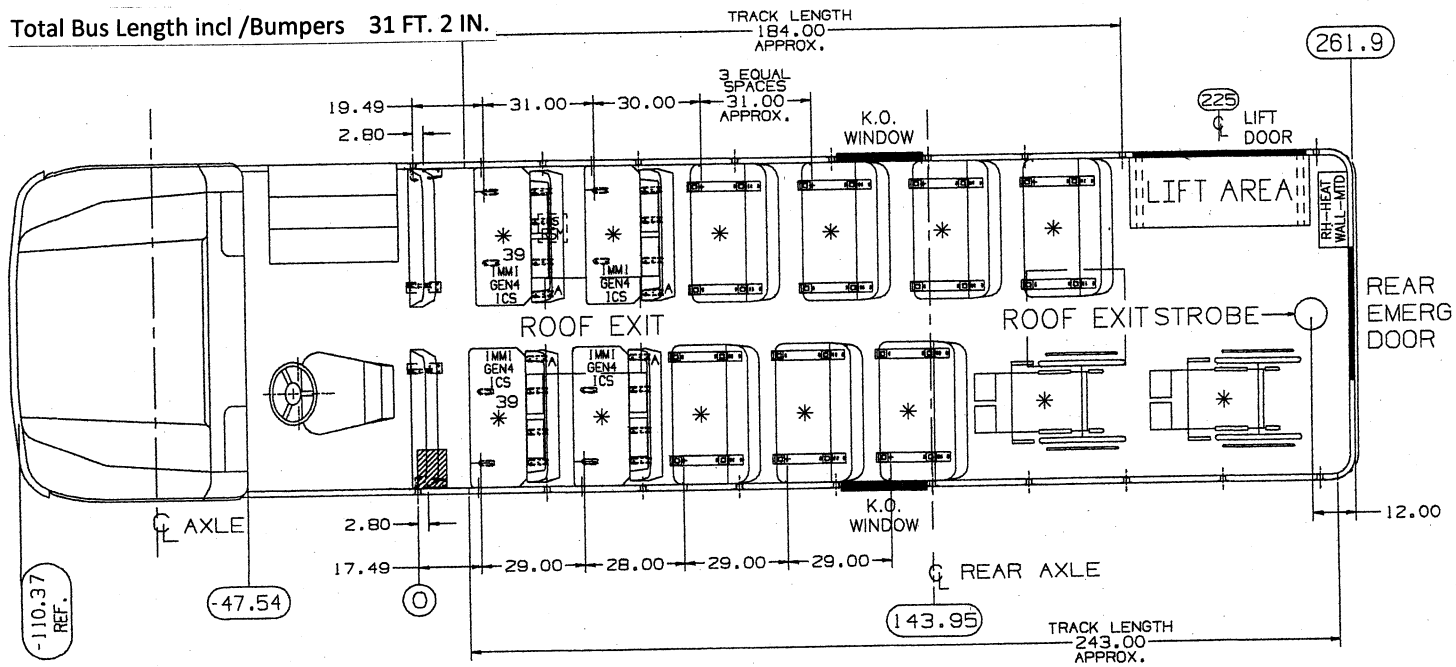

PURCHASED SEATS IN THIS UNIT ARE:
GEN4 CHILD RESTRAINT

✱ 427": TOTAL TRACK LENGTH (APPROXIMATELY)

♦ NOTE:
IT IS THE SELLING DEALER'S RESPONSIBILITY TO ENSURE THAT ANY WHEELCHAIR TIE - DOWN SYSTEM SPECIFIED AND DEPICTED ON THIS DRAWING MEETS ALL DESTINATION STATE SPECIFICATIONS AND TO ALSO ENSURE THAT THE WHEELCHAIRS CAN BE PLACED AND REMOVED WITH RESPECT TO: SEATS, K/O's, SIDE EMERG DOORS, HEATERS, LIFTS, WHEELHOUSES, ETC..
POSSESSION OF THIS PRINT DOES NOT IN ANY WAY OBLIGATE IC CORP. TO BUILD THE UNIT SHOWN.
WC TRACK SHOWN IS FOR REFERENCE ONLY.

THIS UNIT CONFORMS TO APPLICABLE FMVSS

THIS DOCUMENT IS IN ACCORDANCE WITH ASME Y14.5M-1994 AS AMENDED BY THE INTERNATIONAL TRUCK DIVISION DIMENSIONING AND TOLERANCING ADDENDUM-2000.

50000/49000

REVISE ONLY ON UGRAF SYSTEM

INTERNATIONAL TRUCK AND ENGINE CORPORATION

INTERNATIONAL®CONFIDENTIAL PROPRIETARY

REFERENCE 000

LINEAR MEASURE: mm ☐ in ☒

UNLESS SPECIFIED DIM TOLERANCES ARE

	mm	in
ONE PLACE (.X)	±1.5	±.06
TWO PLACE (.XX)	±0.8	±.03
THREE PLACE (.XXX)	±0.25	±.010
ANGLES	±1°	

APPROX. MASS (WEIGHT): ROUGH PART FINISH PART

THIRD ANGLE PROJECTION

INTERNAL CONTROL

NAME: BODY PLAN PB10500

CONTROL: E 50

NAME TRANSLATION

VERSION: E

DRAWN: U00U185

DATE: 07NOV11

CHECKED

DATE

MATERIAL

APPROVED

DATE

APPROVED

FIRE MAIN CODE

PART TYPE CODE

SCALE: NONE

SIZE: 4

DATE

PART NO.: WHITE-87

SHEET: 01

RELEASE NO.

PAGE

LEFT SIDE FUEL FILL OPTION CANNOT BE USED WITH THIS BODY PLAN.

66 Passenger

BODY PLAN

WHEELBASE 254"

PB10500, 31 FT. 2 IN., CAP 66, SEAT SIZE 39/39, SEAT SPACING VARIES

Total Bus Length incl /Bumpers 36 FT 4 IN.

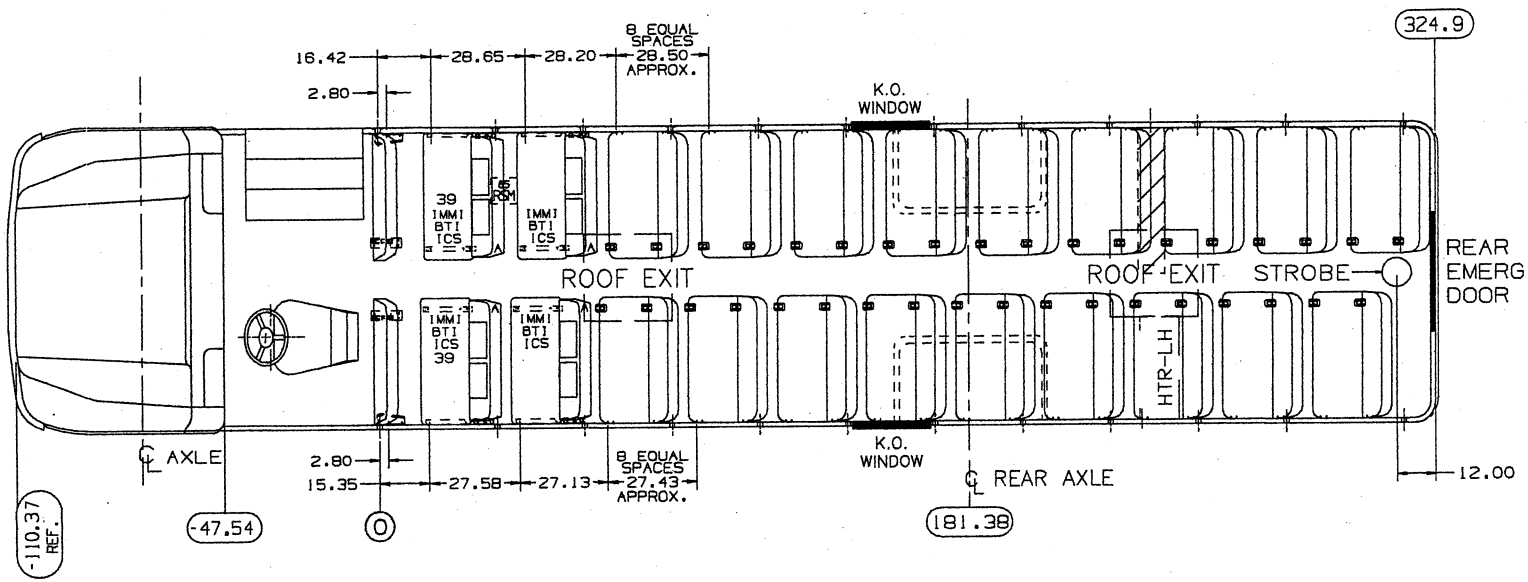

PURCHASED SEATS IN THIS UNIT ARE:
BTI CHILD RESTRAINT

THIS UNIT CONFORMS TO APPLICABLE FMVSS

THIS DOCUMENT IS IN ACCORDANCE WITH ASME Y14.5M-1994 AS AMENDED BY THE INTERNATIONAL TRUCK DIVISION DIMENSIONING AND TOLERANCING ADDENDUM-2000.

50000/49000

INTERNATIONAL TRUCK AND ENGINE CORPORATION

INTERNATIONAL® CONFIDENTIAL PROPRIETARY

REFERENCE 000

LINEAR MEASURE: mm ☐ in ☒

APPROX. MASS (WEIGHT): ROUGH PART / FINISH PART

UNLESS SPECIFIED DIM TOLERANCES ARE

	mm	in
ONE PLACE (.X)	±1.5	±.06
TWO PLACE (.XX)	±0.8	±.03
THREE PLACE (.XXX)	±0.25	±.010
ANGLES	±1°	

THIRD ANGLE PROJECTION

INTERNAL CONTROL

NAME: BODY PLAN PB10500

CONTROL: E 50

NAME TRANSLATION

VERSION: E

DRAWN: U00U185

DATE: 03NOV11

MATERIAL

APPD/REV

DATE

CHECKED

DATE

APPROVED

FINE HOUR CODE

PART TYPE CODE

SCALE: NONE

SIZE: 4

DATE

PART NO.: WHITE-80

SHEET: 01

RELEASE NO.

FRAME

REVISE ONLY ON LEGACY SYSTEM

LEFT SIDE FUEL FILL OPTION CANNOT BE USED WITH THIS BODY PLAN.

VERTICAL HINGED K/O REQUIRED

RH WALL MOUNTED HEATER CANNOT BE USED WITH THIS BODYPLAN.

BODY PLAN

66 Passenger With Lift

WHEELBASE 254"

PB10500, 31 FT. 2 IN., CAP 50, SEAT SIZE 39/39, SEAT SPACING VARIES, LIFT-REAR, 2-WC

Total Bus Length incl /Bumpers 36 FT 4 IN.

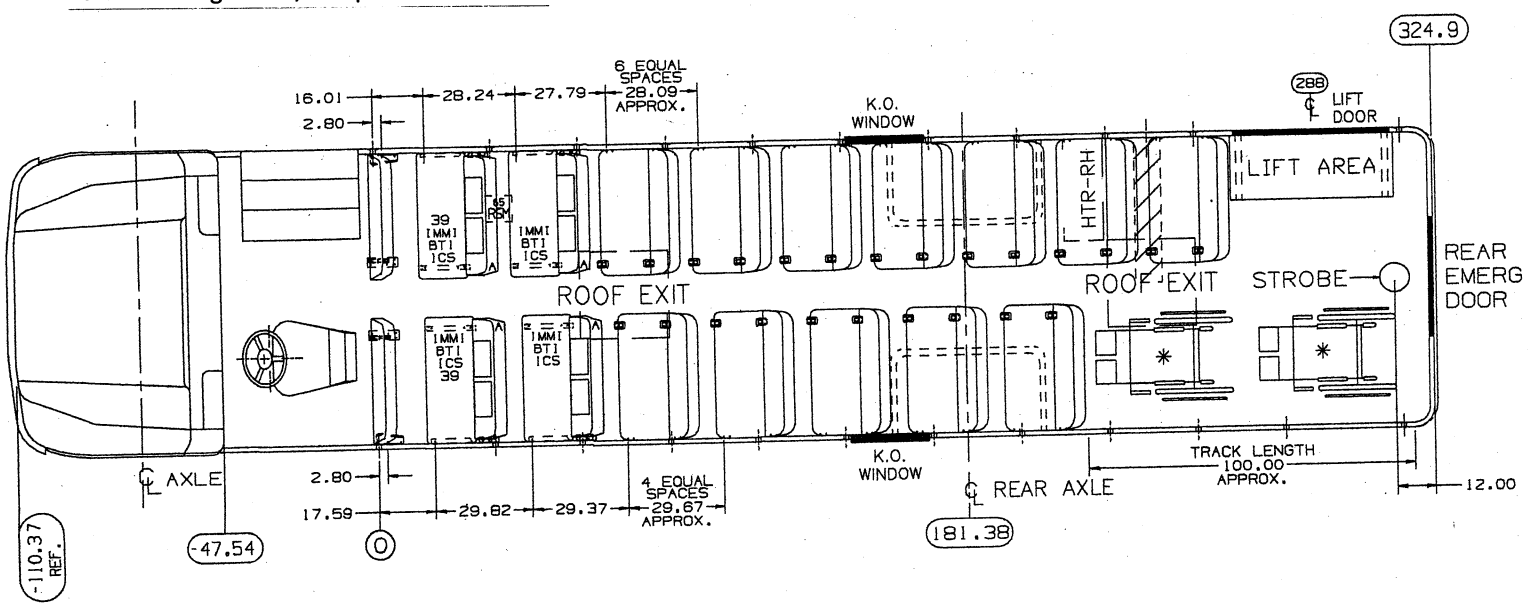

PURCHASED SEATS IN THIS UNIT ARE:
BTI CHILD RESTRAINT

✳ 100": TOTAL TRACK LENGTH (APPROXIMATELY)

* NOTE:
IT IS THE SELLING DEALER'S RESPONSIBILITY TO ENSURE THAT ANY WHEELCHAIR TIE - DOWN SYSTEM SPECIFIED AND DEPICTED ON THIS DRAWING MEETS ALL DESTINATION STATE SPECIFICATIONS AND TO ALSO ENSURE THAT THE WHEELCHAIRS CAN BE PLACED AND REMOVED WITH RESPECT TO: SEATS, K/O'S, SIDE EMERG DOORS, HEATERS, LIFTS, WHEELHOUSES, ETC..
POSSESSION OF THIS PRINT DOES NOT IN ANY WAY OBLIGATE IC CORP. TO BUILD THE UNIT SHOWN.
WC TRACK SHOWN IS FOR REFERENCE ONLY.

THIS UNIT CONFORMS TO APPLICABLE FMVSS

THIS DOCUMENT IS IN ACCORDANCE WITH ASME Y14.5M-1994 AS AMENDED BY THE INTERNATIONAL TRUCK DIVISION DIMENSIONING AND TOLERANCING ADDENDUM-2000.

50000/49000

REVISE ONLY ON LEGACY SYSTEM

INTERNATIONAL TRUCK AND ENGINE CORPORATION

INTERNATIONAL® CONFIDENTIAL PROPRIETARY

REFERENCE: 000

LINEAR MEASURE: mm [ ] in [X]

UNLESS SPECIFIED BYN TOLERANCES ARE

	mm	in
ONE PLACE (.X)	±1.5	±.06
TWO PLACE (.XX)	±0.8	±.03
THREE PLACE (.XXX)	±0.25	±.010
ANGLES	±1°	

APPROX. MASS (WEIGHT): ROUGH PART / FINISH PART

THIRD ANGLE PROJECTION

INTERNAL CONTROL

NAME: BODY PLAN PB10500

CONTROL: E 50

NAME TRANSLATION

VERSION: E

DRAWN: U00U185 DATE: 03NOV11

MATERIAL

APPROVED / REV

DATE

CHECKED

DATE

APPROVED

FINE HOUR CODE | PART TYPE CODE | SCALE: NONE | SIZE: 4

DATE

PART NO.: WHITE-79

SHEET: 01

RELEASE NO.

FRAME

LEFT SIDE FUEL FILL OPTION CANNOT BE USED WITH THIS BODY PLAN.

VERTICAL HINGED K/O REQUIRED

BODY PLAN

FLAT FLOOR

WHEELBASE 254"

66 Passenger With Lift & Flat Floor

PB10500, 31 FT. 2 IN., CAP 50, SEAT SIZE 39/39, SEAT SPACING VARIES, LIFT-REAR, 2-WC

Total Bus Length incl /Bumpers 36 FT 4 IN.

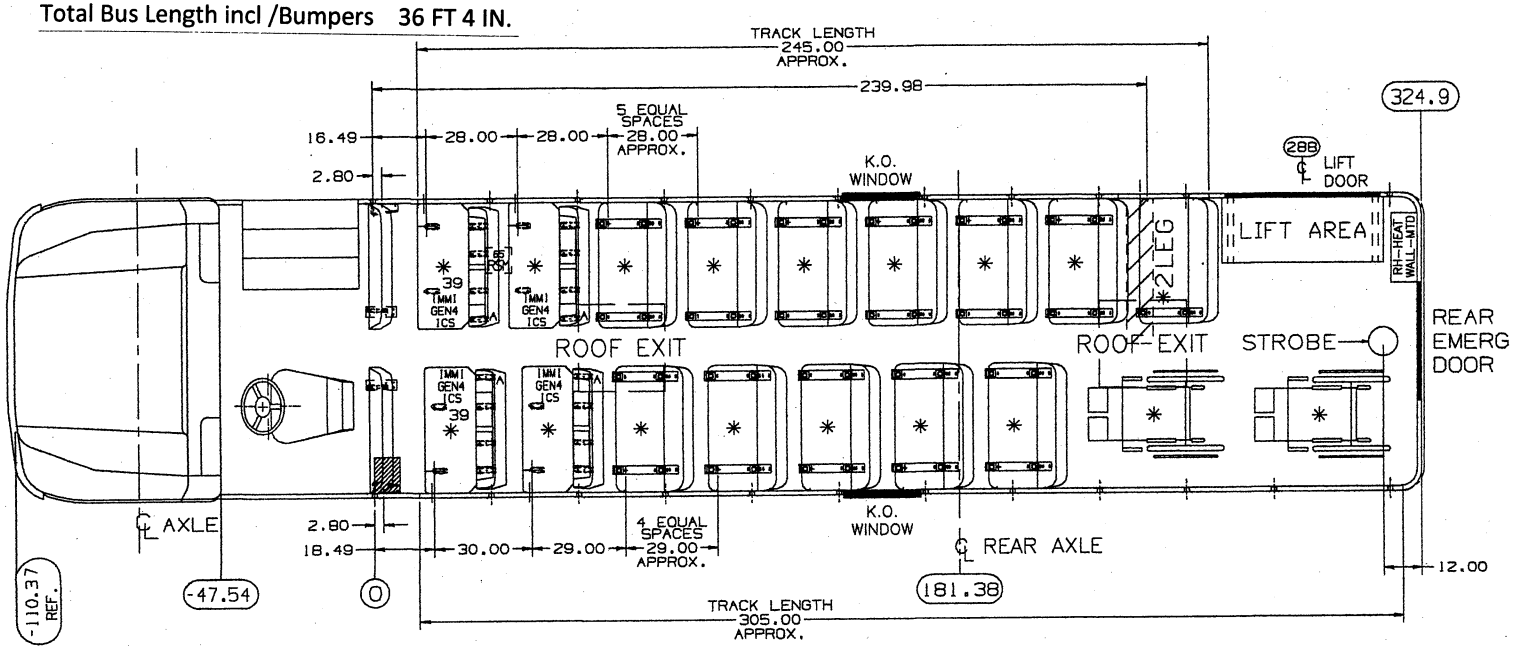

PURCHASED SEATS IN THIS UNIT ARE:
GEN4 CHILD RESTRAINT

✳ 550": TOTAL TRACK LENGTH (APPROXIMATELY)

◆ NOTE:
IT IS THE SELLING DEALER'S RESPONSIBILITY TO ENSURE THAT ANY WHEELCHAIR TIE - DOWN SYSTEM SPECIFIED AND DEPICTED ON THIS DRAWING MEETS ALL DESTINATION STATE SPECIFICATIONS AND TO ALSO ENSURE THAT THE WHEELCHAIRS CAN BE PLACED AND REMOVED WITH RESPECT TO: SEATS, K/O'S, SIDE EMERG DOORS, HEATERS, LIFTS, WHEELHOUSES, ETC.. POSSESSION OF THIS PRINT DOES NOT IN ANY WAY OBLIGATE IC CORP. TO BUILD THE UNIT SHOWN. WC TRACK SHOWN IS FOR REFERENCE ONLY.

THIS UNIT CONFORMS TO APPLICABLE FMVSS

THIS DOCUMENT IS IN ACCORDANCE WITH ASME Y14.24M-1994 AS AMENDED BY THE INTERNATIONAL TRUCK DIVISION DIMENSIONING AND TOLERANCING ADDENDUM-2000.

50000/49000

REVISE ONLY ON LOGIC SYSTEM

INTERNATIONAL TRUCK AND ENGINE CORPORATION

INTERNATIONAL® CONFIDENTIAL PROPRIETARY

REFERENCE 000

LINEAR MEASURE: mm ☐ in ☒

APPROX. MASS (WEIGHT): ROUGH PART / FINISH PART

UNLESS SPECIFIED SIX TOLERANCES ARE

		mm	in
ONE PLACE	(.X)	±1.5	±.06
TWO PLACE	(.XX)	±0.8	±.03
THREE PLACE	(.XXX)	±0.25	±.010
ANGLES		±1°	

THIRD ANGLE PROJECTION

INTERNAL CONTROL

NAME: BODY PLAN PB10500

CONTROL: E 50

NAME TRANSLATION

VERSION: E

DRAWN: U00U185

DATE: 04NOV11

CHECKED

DATE

MATERIAL

APPROVED

DATE

APPROVED

FINE ASSM CODE

PART TYPE CODE

SCALE: NONE

SIZE: 4

DATE

RELEASE NO.

PART NO.: WHITE-86

SHEET: 01

FRAME

LEFT SIDE FUEL FILL OPTION CANNOT BE USED WITH THIS BODY PLAN.

BODY PLAN

72 Passenger

WHEELBASE 276"

PB10500, 33 FT. 5 IN., CAP 72, SEAT SIZE 39/39, SEAT SPACING VARIES

Total Bus Length incl /Bumpers 38 FT. 7 IN.

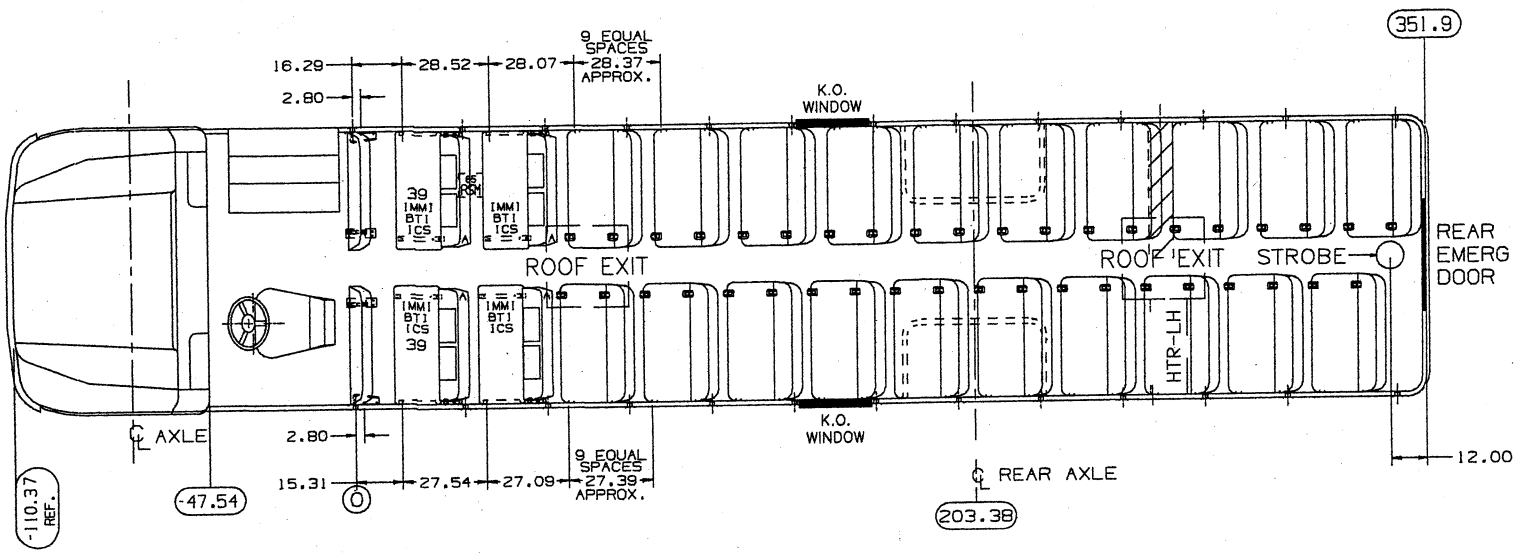

PURCHASED SEATS IN THIS UNIT ARE:
BTI CHILD RESTRAINT

THIS UNIT CONFORMS TO APPLICABLE FMVSS

THIS DOCUMENT IS IN ACCORDANCE WITH ASME Y14.5M-1994 AS AMENDED BY THE INTERNATIONAL TRUCK DIVISION DIMENSIONING AND TOLERANCING ADDENDUM-2000.

50000/49000

INTERNATIONAL TRUCK AND ENGINE CORPORATION

INTERNATIONAL® CONFIDENTIAL PROPRIETARY

REVISE ONLY ON CCSNF SYSTEM

REFERENCE 000

LINEAR MEASURE: mm in

APPROX. MASS (WEIGHT): ROUGH PART / FINISH PART

	mm	in
ONE PLACE (.X)	±1.5	±.06
TWO PLACE (.XX)	±0.8	±.03
THREE PLACE (.XXX)	±0.25	±.010
ANGLES	±1°	

THIRD ANGLE PROJECTION

INTERNAL CONTROL

NAME: BODY PLAN PB10500

CONTROL: E 50

NAME TRANSLATION

VERSION: E

DRAWN: U00U185

DATE: 03NOV11

CHECKED

DATE

MATERIAL

APPROVED

DATE

RELEASE NO.

PART TYPE CODE

SCALE: NONE

SIZE: 4

PART NO.: WHITE-85

SHEET: 01

FRAME

LEFT SIDE FUEL FILL OPTION CANNOT BE USED WITH THIS BODY PLAN.

RH WALL MOUNTED HEATER CANNOT BE USED WITH THIS BODYPLAN.

BODY PLAN

72 Passenger With Lift

WHEELBASE 276"

PB10500, 33 FT. 5 IN., CAP 56, SEAT SIZE 39/39, SEAT SPACING VARIES, LIFT-REAR, 2-WC

Total Bus Length incl /Bumpers 38 FT. 7 IN.

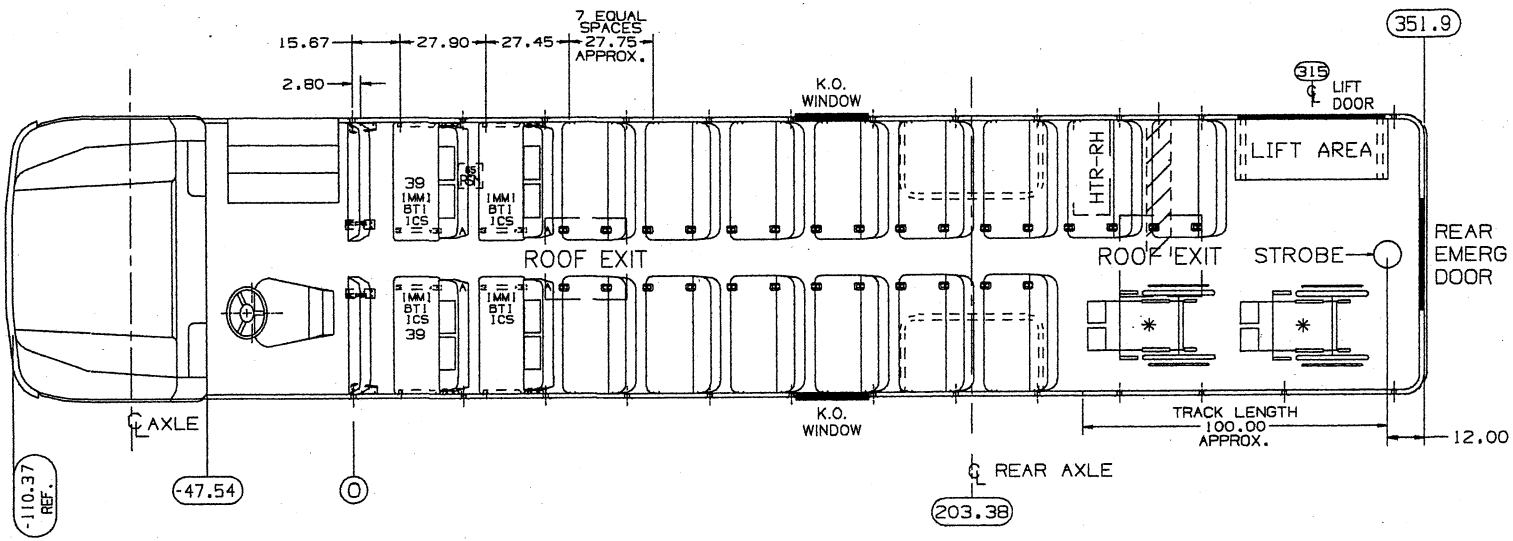

PURCHASED SEATS IN THIS UNIT ARE:
BTI CHILD RESTRAINT

✳ 100"": TOTAL TRACK LENGTH (APPROXIMATELY)

* NOTE:
IT IS THE SELLING DEALER'S RESPONSIBILITY TO ENSURE THAT ANY WHEELCHAIR TIE - DOWN SYSTEM SPECIFIED AND DEPICTED ON THIS DRAWING MEETS ALL DESTINATION STATE SPECIFICATIONS AND TO ALSO ENSURE THAT THE WHEELCHAIRS CAN BE PLACED AND REMOVED WITH RESPECT TO: SEATS, K/O's, SIDE EMERG DOORS, HEATERS, LIFTS, WHEELHOUSES, ETC..
POSSESSION OF THIS PRINT DOES NOT IN ANY WAY OBLIGATE IC CORP. TO BUILD THE UNIT SHOWN.
WC TRACK SHOWN IS FOR REFERENCE ONLY.

THIS UNIT CONFORMS TO APPLICABLE FMVSS

THIS DOCUMENT IS IN ACCORDANCE WITH ASME Y14.5M-1994 AS AMENDED BY THE INTERNATIONAL TRUCK DIVISION DIMENSIONING AND TOLERANCING ADDENDUM-2000.

50000/49000

REVISE ONLY ON USBPF SYSTEM

INTERNATIONAL TRUCK AND ENGINE CORPORATION

INTERNATIONAL® CONFIDENTIAL PROPRIETARY

REFERENCE 000

LINEAR MEASURE: mm ☐ in ☒

APPROX. MASS (WEIGHT) ROUGH PART FINISH PART

UNLESS SPECIFIED DIM TOLERANCES ARE

		mm	in
ONE PLACE	(.X)	±1.5	±.06
TWO PLACE	(.XX)	±0.8	±.03
THREE PLACE	(.XXX)	±0.25	±.010
ANGLES		±1°	

THIRD ANGLE PROJECTION

INTERNAL CONTROL

NAME: BODY PLAN PB10500

CONTROL: E 50

NAME (TRANSLATION)

VARIATION: E

DRAWN: U00U185

DATE: 03NOV11

CHECKED

DATE

MATERIAL

APPD/REV

DATE

APPROVED

FINE MARK CODE

PART TYPE CODE

SCALE: NONE

SIZE: 4

DATE

PART NO.: WHITE-83

SHEET: 01

RELEASE NO.

FRAME

LEFT SIDE FUEL FILL OPTION CANNOT BE USED WITH THIS BODY PLAN.

72 Passenger With Lift & Flat Floor

FLAT FLOOR

BODY PLAN

WHEELBASE 276"

PB10500, 33 FT. 5 IN., CAP 56, SEAT SIZE 39/39, SEAT SPACING VARIES, LIFT-REAR, 2-WC

Total Bus Length incl /Bumpers 38 FT. 7 IN.

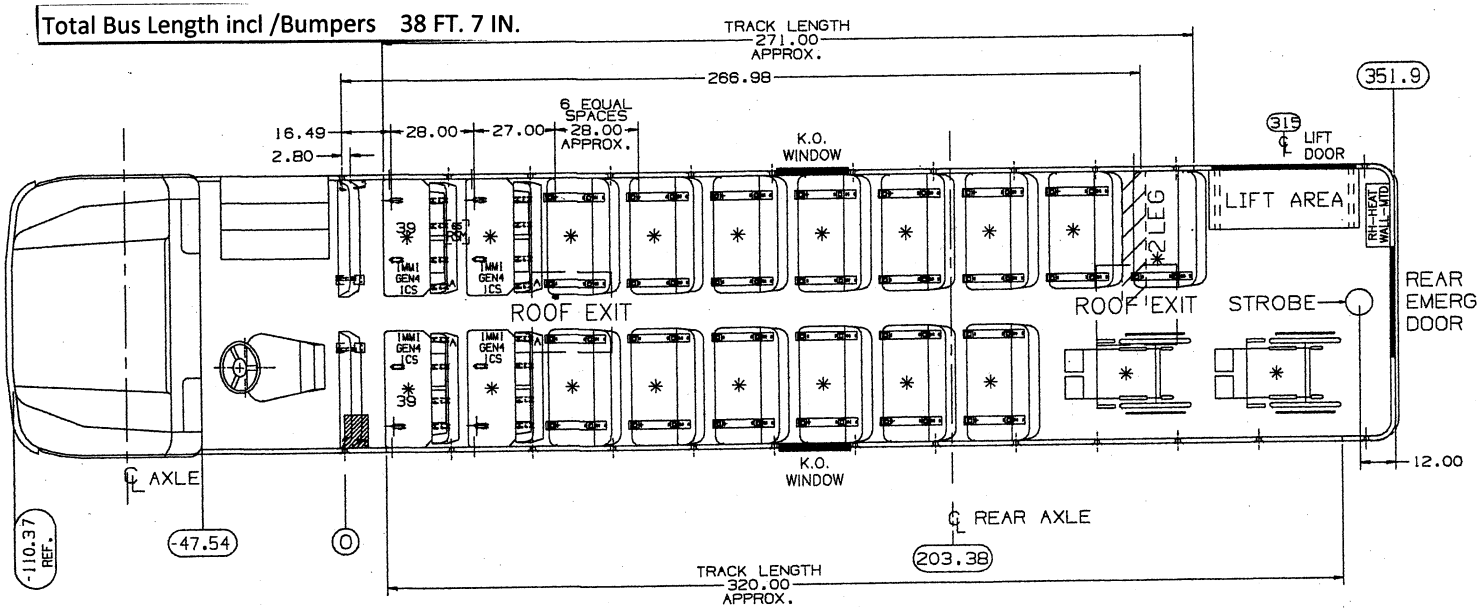

PURCHASED SEATS IN THIS UNIT ARE:
GEN4 CHILD RESTRAINT

✳ 591": TOTAL TRACK LENGTH (APPROXIMATELY)

* NOTE:
IT IS THE SELLING DEALER'S RESPONSIBILITY TO ENSURE THAT ANY WHEELCHAIR TIE - DOWN SYSTEM SPECIFIED AND DEPICTED ON THIS DRAWING MEETS ALL DESTINATION STATE SPECIFICATIONS AND TO ALSO ENSURE THAT THE WHEELCHAIRS CAN BE PLACED AND REMOVED WITH RESPECT TO: SEATS, K/O's, SIDE EMERG DOORS, HEATERS, LIFTS, WHEELHOUSES, ETC..
POSSESSION OF THIS PRINT DOES NOT IN ANY WAY OBLIGATE IC CORP. TO BUILD THE UNIT SHOWN.
WC TRACK SHOWN IS FOR REFERENCE ONLY.

THIS UNIT CONFORMS TO APPLICABLE FMVSS

THIS DOCUMENT IS IN ACCORDANCE WITH ASME Y14.5M-1994 AS AMENDED BY THE INTERNATIONAL TRUCK DIVISION DIMENSIONING AND TOLERANCING ADDENDUM-2000.

50000/49000

REVISE ONLY ON LEANIF SYSTEM

INTERNATIONAL TRUCK AND ENGINE CORPORATION

INTERNATIONAL® CONFIDENTIAL PROPRIETARY

REFERENCE 000

LINEAR MEASURE: mm ☐ in ☒

UNLESS SPECIFIED BIN TOLERANCES ARE

	mm	in
ONE PLACE (.X)	±1.5	±.06
TWO PLACE (.XX)	±0.8	±.03
THREE PLACE (.XXX)	±0.25	±.010
ANGLES	±1°	

APPROX. MASS (WEIGHT) ROUGH PART FINISH PART

THIRD ANGLE PROJECTION

INTERNAL CONTROL

NAME: BODY PLAN PB10500

ORIGINAL: E 50

VERSION: E

DRAWN: U00U185

DATE: 07NOV11

CHECKED

DATE

MATERIAL

APPROVED

DATE

RELEASE NO.

FINE NOUN CODE

PART TYPE CODE

SCALE: NONE

SIZE: 4

PART NO.: WHITE-89

SHEET: 01

FRAME